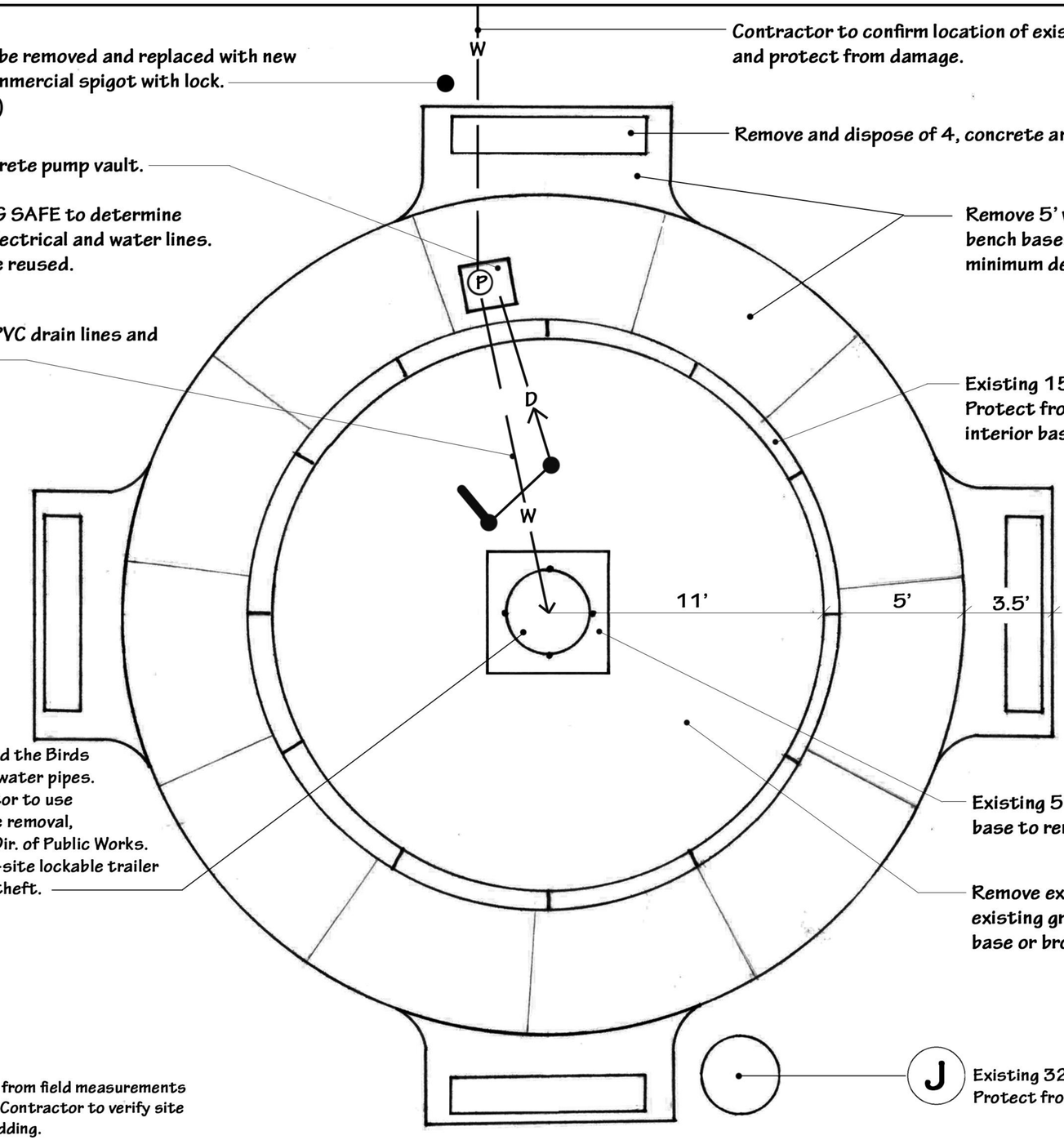

Contractor to confirm location of existing water line and protect from damage.

Existing water bib to be removed and replaced with new 4' tall frost-proof commercial spigot with lock. (See sheet L-2 & D-2)

Remove and dispose of 4, concrete and wood benches.

Remove exisitng concrete pump vault.

Contractor to call DIG SAFE to determine location of existing electrical and water lines. Both to remain and be reused.

Remove 5' wide poured concrete sidewalk and bench bases and existing aggregate base to 18" minimum depth.

Remove and replace PVC drain lines and water supply line.

Existing 15" high granite perimeter wall to remain. Protect from damage. Reset if possible once the interior basin is removed.

It may be necessary for the Lady and the Birds sculpture to be removed to access water pipes. Contractor to verify. If so, contractor to use extreme caution and coordinate the removal, storage and replacement with the Dir. of Public Works. protect sculture and store in an on-site lockable trailer or container to prevent damage or theft.

Existing 5' square granite sculpture base to remain. Protect from damage

Remove existing concrete basin. Do not damage existing granite perimeter wall, granite sculture base or bronze sculture.

Existing 32" Oak tree to remain. Protect from Damage

NOTES:

1. Existing conditions and site features from field measurements and use of Google Earth aerial image. Contractor to verify site conditions and dimensions prior to bidding.
2. Project site to be protected from pedestrian use with orange construction fencing and signage. Fencing to be maintained from start to finish or project.

GRAPHIC SCALE: 1" = 5' @ 11" X 17" SHEET

0' 5' 10' 15'

TOM FARMER
LANDSCAPE
ARCHITECTURE

Tom Farmer, Landscape Architect
22 Abby Lane, Yarmouth, ME 04096
tsffarmer@gmail.com
p. 207.749.4032

EXISTING CONDITIONS AND DEMOLITION PLAN

Palmer Fountain - Lady and the Birds
The Gardiner Commons
Gardiner, Maine

Date:
April 21, 2023

L-1

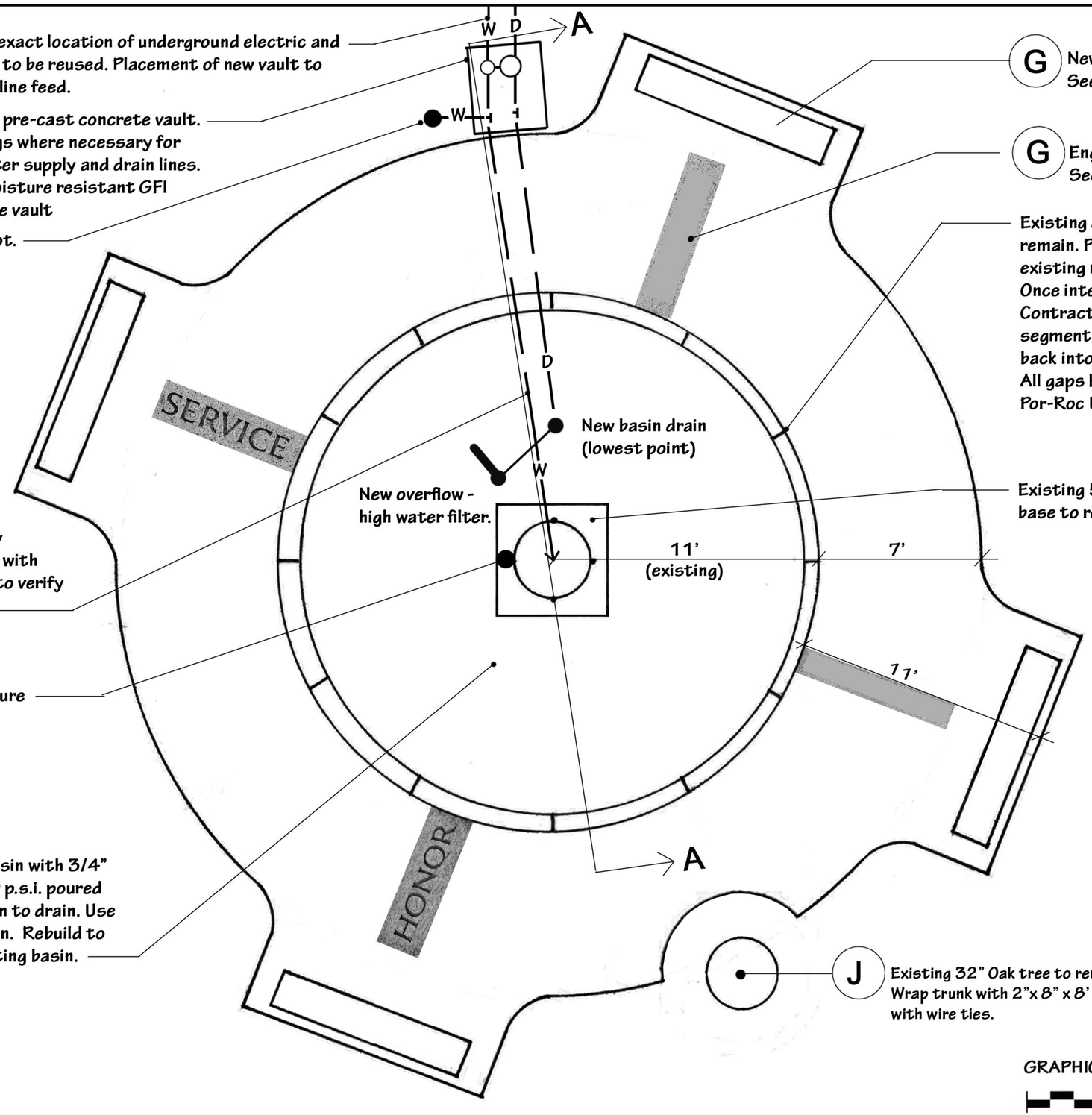

Contractor to verify exact location of underground electric and water line. Water line to be reused. Placement of new vault to correspond to water line feed.

C New 4' W x 6' L x 4' H pre-cast concrete vault. Core drill new openings where necessary for electrical supply, water supply and drain lines. Supply and install moisture resistant GFI outlet and light inside vault

H New water hose spigot. 4' tall frost-proof commercial spigot with lock. (See spec)

Remove and replace PVC drain line and water supply line per City code. Consult with Pump and Filter Company to verify pipe sizes.

Install LED waterproof up-light focused on sculpture (see spec)

B Form new fountain basin with 3/4" rebar and new 3,500 p.s.i. poured concrete. Shape basin to drain. Use existing drain location. Rebuild to similar depth of existing basin.

New basin drain (lowest point)

New overflow - high water filter.

G New granite benches (4) See Spec.

G Engraved Granite slabs (4) See Spec.

Existing granite perimeter wall segments to remain. Protect from damage. Remove all existing mortar and caulk between stones. Once interior basin and sidewalk are removed, Contractor to access resetting stone segments. Segments to be pushed back into place for tighter fit, if possible. All gaps between stones to be filled with Por-Roc UW Grout or approved equal.

Existing 5' square granite sculpture base to remain. Protect from damage

J Existing 32" Oak tree to remain. Protect from Damage. Wrap trunk with 2"x 8" x 8' tall planks secured together with wire ties.

GRAPHIC SCALE: 1" = 5' @ 11" X 17" SHEET

0' 5' 10' 15'

TOM FARMER LANDSCAPE ARCHITECTURE

Tom Farmer, Landscape Architect
22 Abby Lane, Yarmouth, ME 04096
tsffarmer@gmail.com
p. 207.749.4032

PROPOSED IMPROVEMENT PLAN

Palmer Fountain - Lady and the Birds

The Gardiner Commons
Gardiner, Maine

Date:
April 21, 2023

L-2

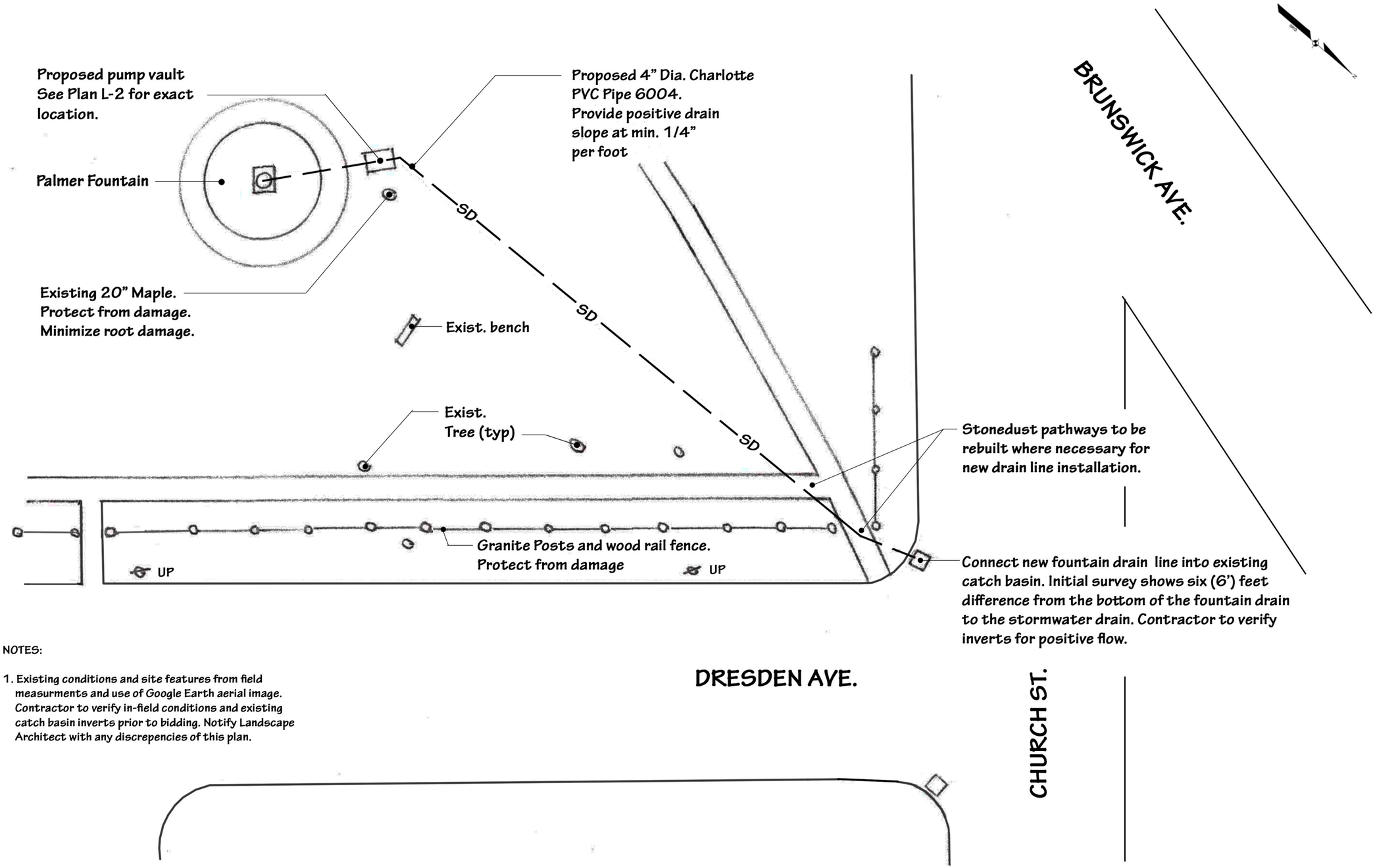

NOTES:

1. Existing conditions and site features from field measurments and use of Google Earth aerial image. Contractor to verify in-field conditions and existing catch basin inverts prior to bidding. Notify Landscape Architect with any discrepencies of this plan.

GRAPHIC SCALE: 1" = 30' (@11"X17" sheet)

0' 20' 40' 60'

TOM FARMER
LANDSCAPE
ARCHITECTURE

Tom Farmer, Landscape Architect
22 Abby Lane, Yarmouth, ME 04096
tsffarmer@gmail.com
p. 207.749.4032

PROPOSED DRAIN LINE PLAN

Palmer Fountain - Lady and the Birds
The Gardiner Commons
Gardiner, Maine

Date:
April 21, 2023

L-3

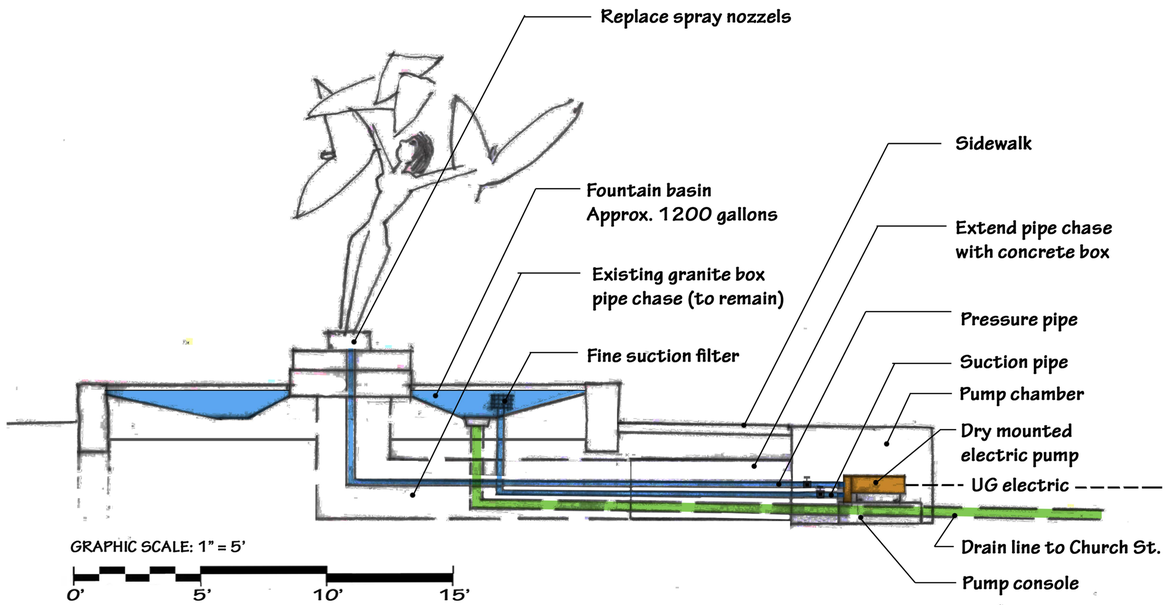

A SCHEMATIC CROSS-SECTION FOUNTAIN AND PUMP VAULT

EXCAVATE UNSUITABLE AGGREGATE SUBBASE AND REPLACE WITH TYPE A MDOT SECTION 703.06 BASE COURSE COMPACTED IN 4" LIFTS

D PICTURE EXAMPLE OF WATER BASIN RE-BAR REINFORCEMENT

NOT TO SCALE

APPROXIMATE WEIGHT:
8,520 LBS (2.13 CY) SPLICE BOX
2,440 LBS (0.61 CY) BASE SLAB

DESIGN NOTES:
1. CONCRETE TO BE 5,000 PSI @ 28 DAYS.
2. REINFORCING TO BE GRADE 60, BLACK.
3. BOX TO BE RATED FOR H-20 LOADING.
4. BASE SLAB OPTIONAL.

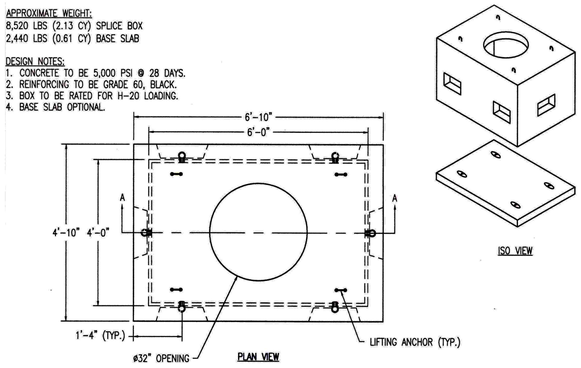

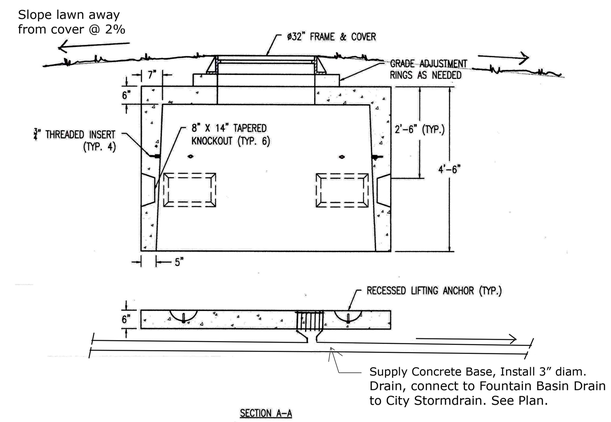

PRECAST CONCRETE VAULT WITH CONC. BASE AND COVER

NOT TO SCALE

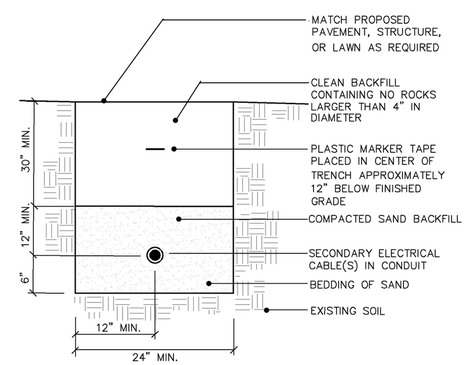

NOTES:
CABLES TO BE ENCASED IN SCHEDULE 40 PVC CONDUIT WHEN RUN BENEATH PAVED AREAS

B UNDERGROUND ELECTRICAL CONDUIT

NOT TO SCALE

TOM FARMER
LANDSCAPE
ARCHITECTURE

Tom Farmer, Landscape Architect
22 Abby Lane, Yarmouth, ME 04096
tsfarmer@gmail.com
p. 207.749.4032

CONSTRUCTION DETAILS

Palmer Fountain - Lady and the Birds
The Gardiner Commons
Gardiner, Maine

Date:
April 21, 2023

D-1

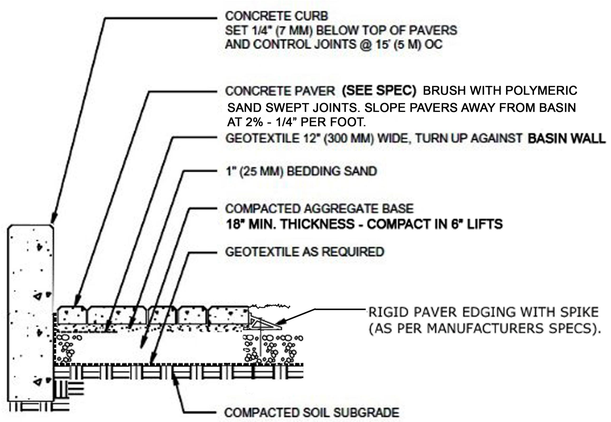

E CONCRETE PAVER DETAIL
NOT TO SCALE

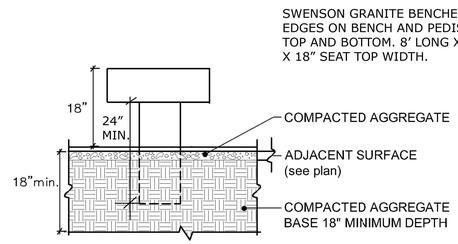

G GRANITE BENCH AND GRANITE LEG DETAIL
NOT TO SCALE

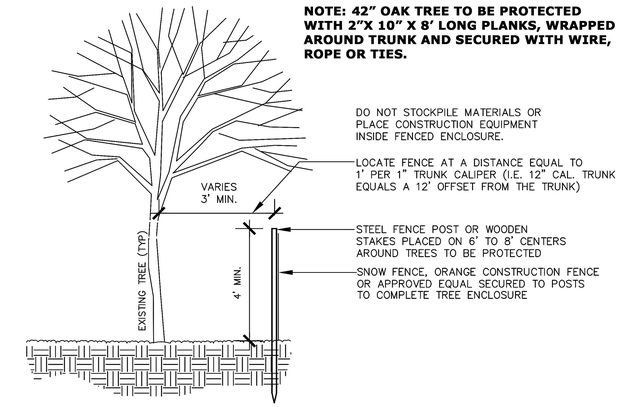

J TREE PROTECTION DETAIL
NOT TO SCALE

SIMMONS Frost Proof Yard Hydrant:
4 ft Bury Dp, 78 1/2 in Overall Lg,
3/4 in FNPT Inlet Size
Item #482A18, Mfr. Model # 804SB
Distributed by Grainger or approved equal.

Install per manufacutures recommendations

H HOSE SPIGOT
NOT TO SCALE

THE 4 SLABS TO READ:

1. SERVICE
2. JUSTICE
3. DEDICATION
4. HONOR

4 ENGRAVED GRANITE SLABS,
3" THICK, 12' WIDE X 7' LONG.

TIMES NEW ROMAN FONT,
6" TALL CAPITAL LETTERS,
CENTERED IN SLAB.

F ENGRAVED GRANITE SLABS
NOT TO SCALE

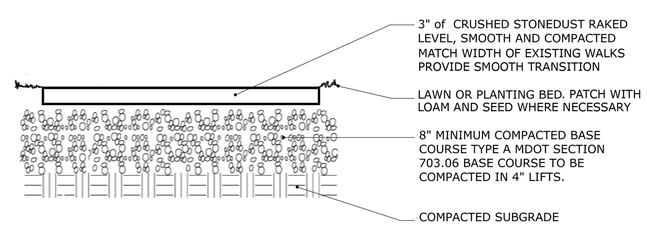

I STONEDUST WALKWAY DETAIL
NOT TO SCALE

KATAHDIN STONE 3-PIECE
SYSTEM CONCRETE PAVER
COLOR: GRANITE BLEND
BT GENEST CONCRETE OR
APPROVED EQUAL.

K PROPOSED COLOR AND PATTERN OF NEW SIDEWALK
NOT TO SCALE

TOM FARMER
LANDSCAPE
ARCHITECTURE

Tom Farmer, Landscape Architect
22 Abby Lane, Yarmouth, ME 04096
tsfarmer@gmail.com
p. 207.749.4032

CONSTRUCTION DETAILS

Palmer Fountain - Lady and the Birds
The Gardiner Commons
Gardiner, Maine

Date:
April 21, 2023

D-2